-1 ALIGNMENT FIXTURE & CUTOUT TEMPLATE

REVISION HISTORY						
DATE	REV	ECO	DESCRIPTION	AUTHOR	CHECKED	APPROVED
7/20/20	A	-	INITIAL RELEASE	CMK	LS	CMK

1. GENERAL COMMERCIALLY AVAILABLE HARDWARE. PART NUMBER SUBSTITUTIONS PERMITTED.

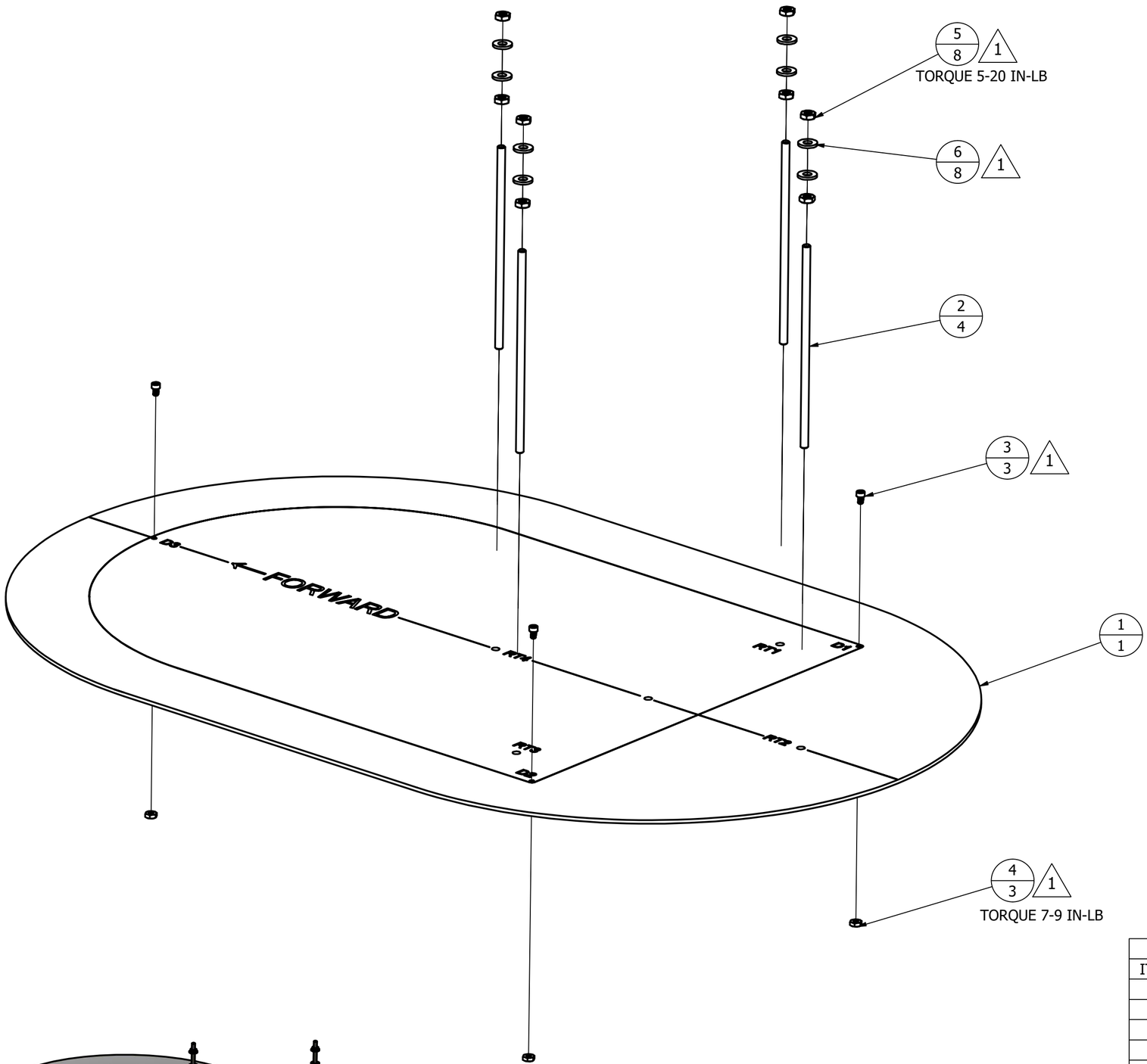

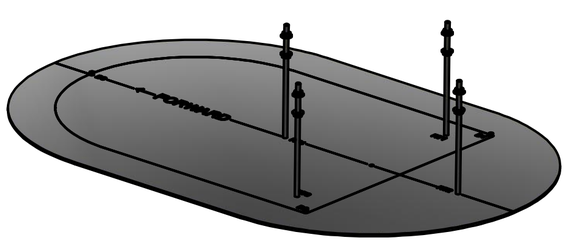

PARTS LIST			
ITEM	QTY	PART NUMBER	DESCRIPTION
1	1	C208RT-7000-10	BASE PLATE
2	4	C208RT-7000-11	ALIGNMENT ROD
3	3	832X14SHCS	8-32 X 1/4 SOCKET HEAD CAP SCREW, ZINC PLATED STEEL
4	3	832HXNUT	8-32 HEX NUT, ZINC PLATED STEEL
5	8	1428THXNUT	1/4-28 THIN HEX NUT, ZINC PLATED STEEL
6	8	14WSHR	Φ1/4 X 0.06 WASHER, ZINC PLATED STEEL

UNLESS OTHERWISE SPECIFIED
DRAWING INTERPRETED PER ASME Y14.100-2004
DIMENSIONS INTERPRETED PER ASME Y14.5-2009
DIMENSIONS IN INCHES
SURFACE ROUGHNESS: 125
REMOVE BURRS & BREAK EDGES 0.005 TO 0.015
.X ±.1
.XX ±.01
.XXX ±.005
ANGLES ±1°
THREADS
INTERNAL: CLASS 2B
EXTERNAL: CLASS 2A

APPROVALS		DATE
DRAWN	CMK	7/21/20
CHECKED	LS	7/21/20
APPROVED	CMK	7/21/20

© 2019 PARAVION TECHNOLOGY, INC. PARAVION IS A TRADEMARK OF PARAVION TECHNOLOGY, INC.

THIRD ANGLE PROJECTION

Paravion® Technology Inc.
2001 AIRWAY AVENUE
FORT COLLINS, CO 80524
www.paravion.com

DOCUMENT TITLE
C208RT INSTALLATION TOOLS

DRAWING NUMBER	CAGE CODE	REV	ECO
C208RT-7000	3CMA0	A	

DO NOT SCALE DRAWING
SHEET 1 OF 5

CONFIDENTIAL INFORMATION
THE INFORMATION AND DATA CONTAINED HEREIN IS PROPRIETARY AND IS SUBMITTED IN CONFIDENCE; AND SHALL NOT BE DISCLOSED, USED OR DUPLICATED FOR ANY PURPOSE WHATSOEVER WITHOUT THE PRIOR WRITTEN PERMISSION OF PARAVION TECHNOLOGY, INC.

-2 LOAD RAIL ALIGNMENT FIXTURE

NOTES

1. ADJACENT SURFACES MUST BE IN CONTACT FOR PROPER ALIGNMENT
2. INSTALL ON LOAD RAILS AT POSITION CLOSEST TO EACH END WHILE LEAVING THE LAST MATCH-DRILLED PILOT HOLES EXPOSED.

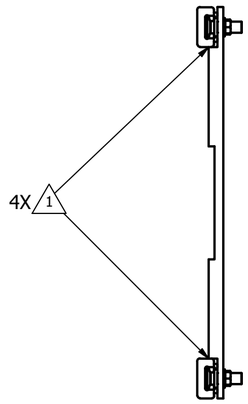

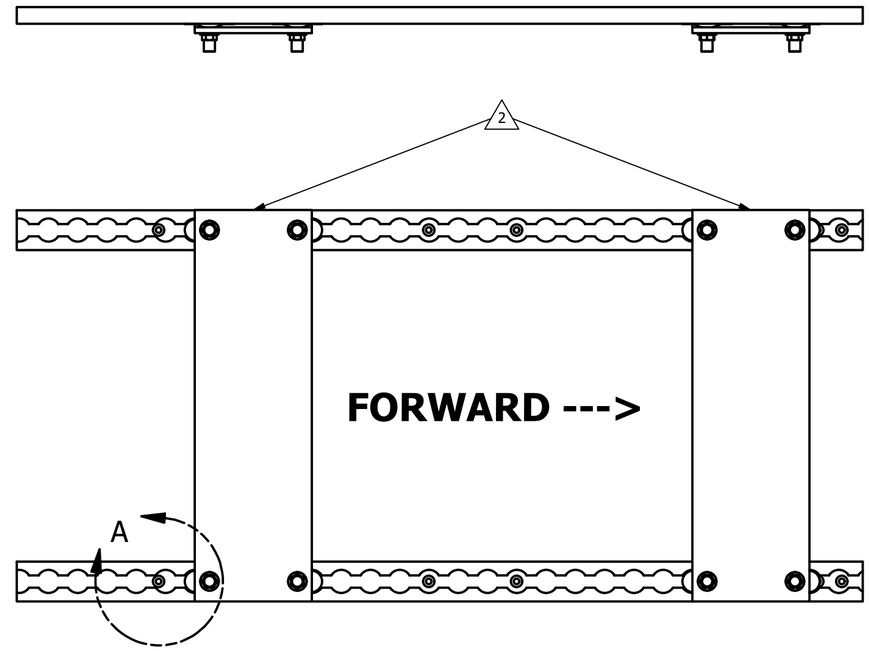

C208ELP-2250-5 LOAD RAILS SHOWN (AFT INSTALLATION)

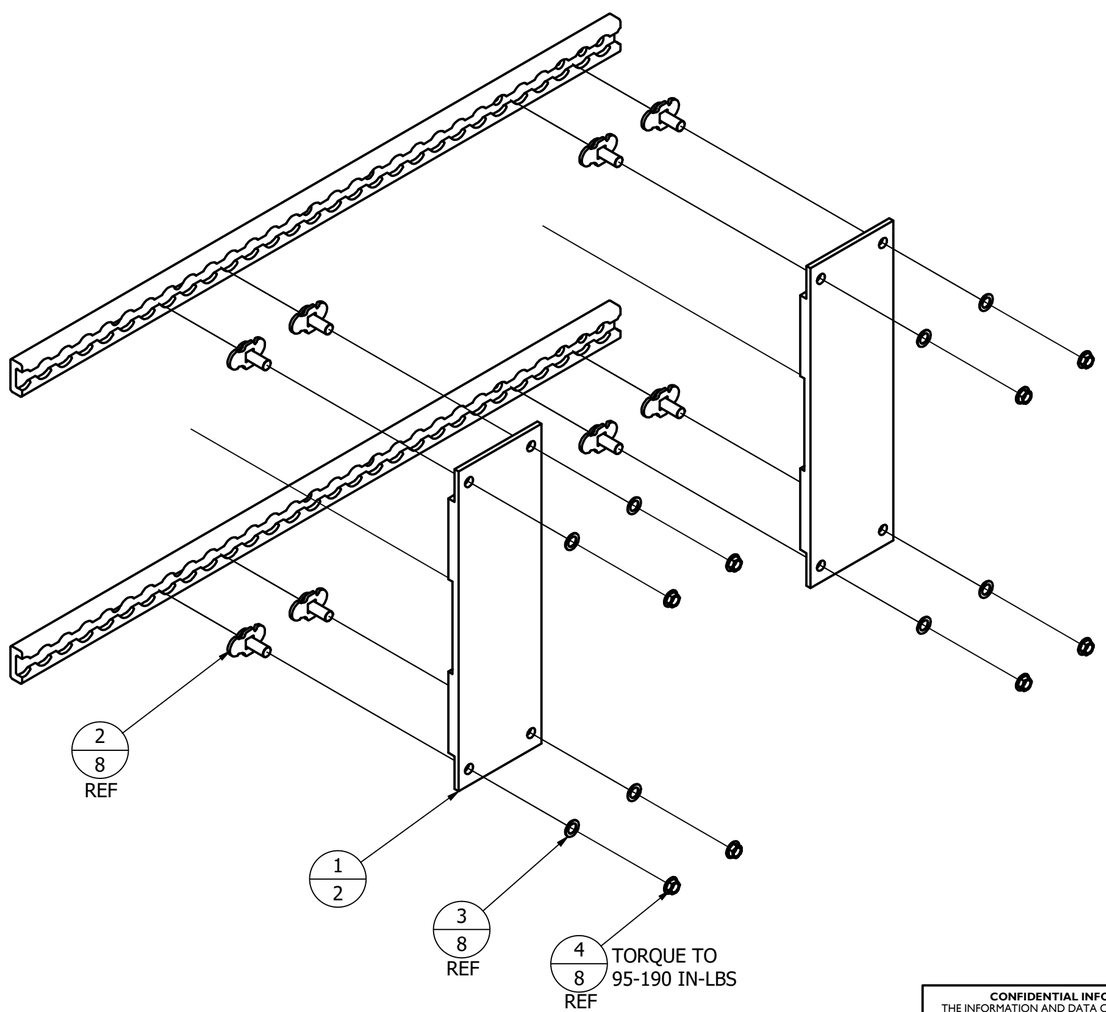

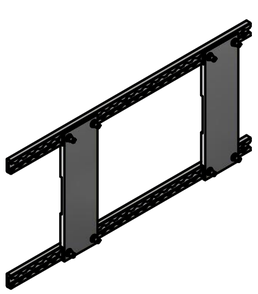

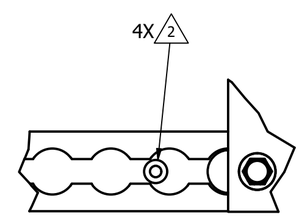

DETAIL A
SCALE 1 / 2

PARTS LIST			
ITEM	QTY	PART NUMBER	DESCRIPTION
1	2	C208RT-7000-12	FIXTURE PLATE
2	8	ES35150-1	FITTING
3	8	NAS1149D0632J	WASHER
4	8	MS21042L6	LOCKING NUT

UNLESS OTHERWISE SPECIFIED
DRAWING INTERPRETED
PER ASME Y14.100-2004
DIMENSIONS INTERPRETED
PER ASME Y14.5-2009
DIMENSIONS IN INCHES
SURFACE ROUGHNESS: 125
REMOVE BURRS & BREAK EDGES
0.005 TO 0.015
.X ±.1
.XX ±.01
.XXX ±.005
ANGLES ±1°
THREADS
INTERNAL: CLASS 2B
EXTERNAL: CLASS 2A

APPROVALS		DATE
DRAWN	CMK	7/21/20
CHECKED	LS	7/21/20
APPROVED	CMK	7/21/20

© 2019 PARAVION TECHNOLOGY, INC. PARAVION IS A TRADEMARK OF PARAVION TECHNOLOGY, INC.

THIRD ANGLE PROJECTION

Paravion® Technology Inc.
2001 AIRWAY AVENUE
FORT COLLINS, CO 80524
www.paravion.com

DOCUMENT TITLE
C208RT INSTALLATION TOOLS

DRAWING NUMBER	CAGE CODE	REV	ECO
C208RT-7000	3CMA0	A	

DO NOT SCALE DRAWING
SHEET 2 OF 5

CONFIDENTIAL INFORMATION
THE INFORMATION AND DATA CONTAINED HEREIN IS PROPRIETARY AND IS SUBMITTED IN CONFIDENCE; AND SHALL NOT BE DISCLOSED, USED OR DUPLICATED FOR ANY PURPOSE WHATSOEVER WITHOUT THE PRIOR WRITTEN PERMISSION OF PARAVION TECHNOLOGY, INC.

-10 BASE PLATE

MATERIAL: 1/8" THICK ALUMINUM PLATE
FINISH: NONE

NOTES

1. LASER ABLATE TEXT OUTLINE MIN ⊽ 0.0005 IN, ARIAL FONT

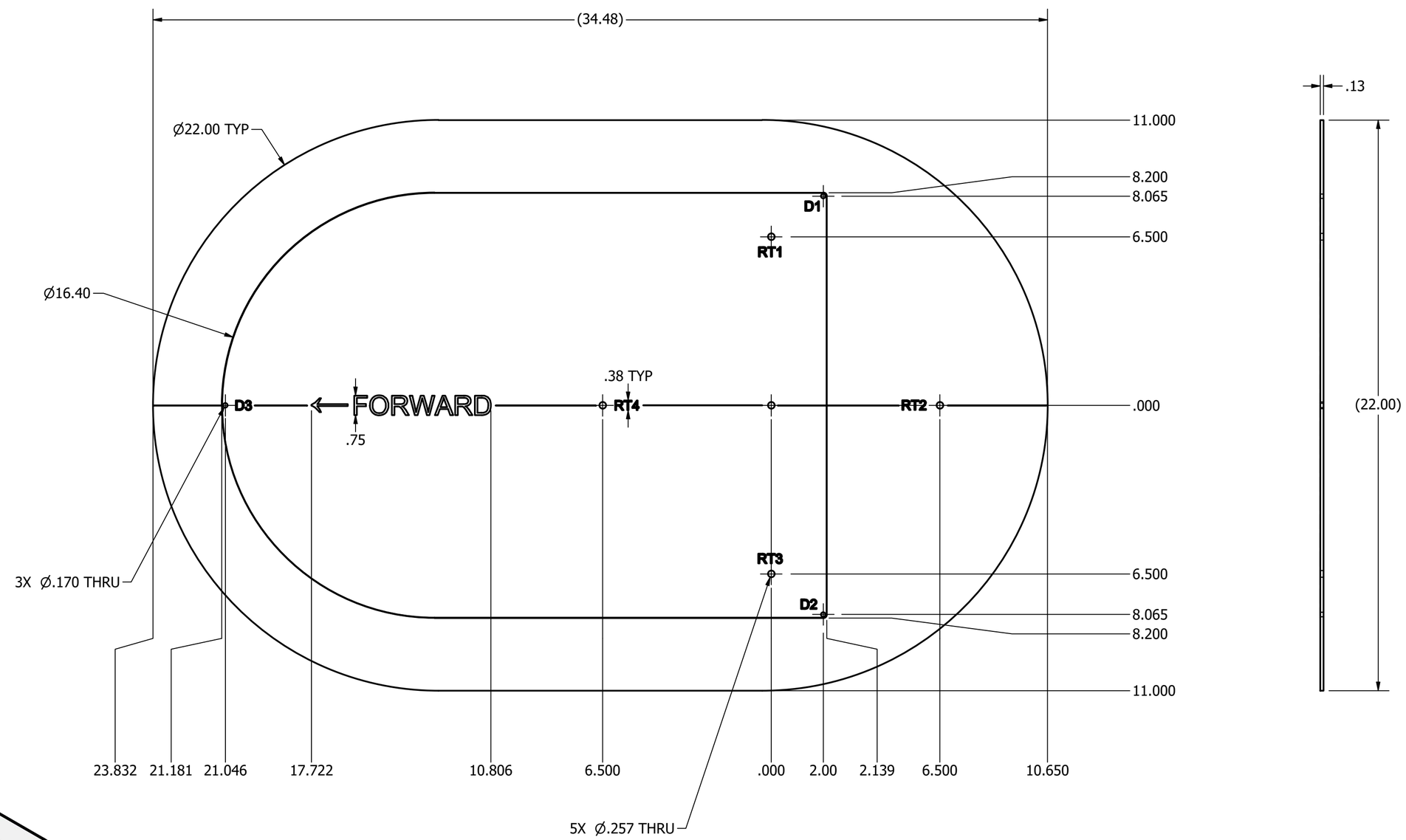

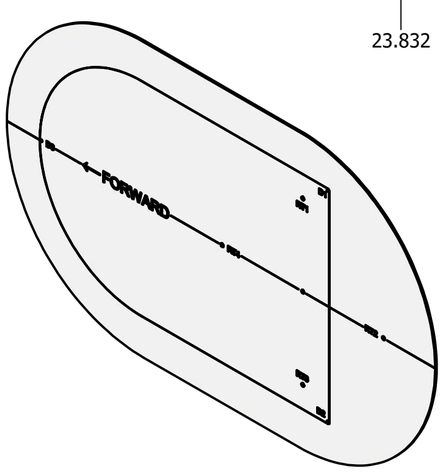

CONFIDENTIAL INFORMATION
THE INFORMATION AND DATA CONTAINED HEREIN IS PROPRIETARY AND IS SUBMITTED IN CONFIDENCE; AND SHALL NOT BE DISCLOSED, USED OR DUPLICATED FOR ANY PURPOSE WHATSOEVER WITHOUT THE PRIOR WRITTEN PERMISSION OF PARAVION TECHNOLOGY, INC.

UNLESS OTHERWISE SPECIFIED
DRAWING INTERPRETED PER ASME Y14.100-2004
DIMENSIONS INTERPRETED PER ASME Y14.5-2009
DIMENSIONS IN INCHES
SURFACE ROUGHNESS: 125
REMOVE BURRS & BREAK EDGES 0.005 TO 0.015
.X ±.1
.XX ±.01
.XXX ±.005
ANGLES ±1°
THREADS
INTERNAL: CLASS 2B
EXTERNAL: CLASS 2A

APPROVALS		DATE
DRAWN	CMK	7/21/20
CHECKED	LS	7/21/20
APPROVED	CMK	7/21/20

© 2019 PARAVION TECHNOLOGY, INC. PARAVION IS A TRADEMARK OF PARAVION TECHNOLOGY, INC.

THIRD ANGLE PROJECTION

Paravion® Technology Inc.
2001 AIRWAY AVENUE
FORT COLLINS, CO 80524
www.paravion.com

DOCUMENT TITLE
C208RT INSTALLATION TOOLS

DRAWING NUMBER	CAGE CODE	REV	ECO
C208RT-7000	3CMA0	A	

DO NOT SCALE DRAWING
SHEET 3 OF 5

-11 ALIGNMENT ROD

MATERIAL: 1/4-28 STEEL THREADED ROD (ALL THREAD)
FINISH: ZINC PLATED

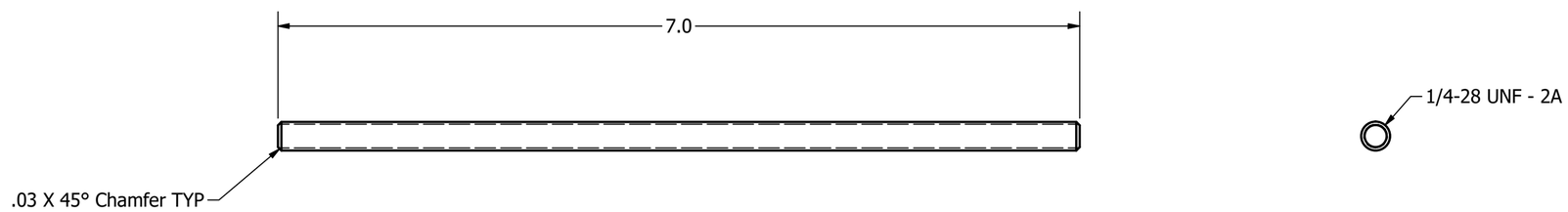

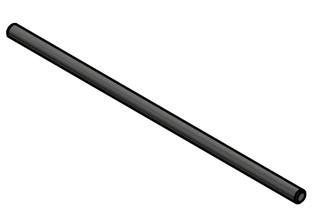

CONFIDENTIAL INFORMATION
THE INFORMATION AND DATA CONTAINED HEREIN IS PROPRIETARY AND IS SUBMITTED IN CONFIDENCE; AND SHALL NOT BE DISCLOSED, USED OR DUPLICATED FOR ANY PURPOSE WHATSOEVER WITHOUT THE PRIOR WRITTEN PERMISSION OF PARAVION TECHNOLOGY, INC.

UNLESS OTHERWISE SPECIFIED
DRAWING INTERPRETED PER ASME Y14.100-2004
DIMENSIONS INTERPRETED PER ASME Y14.5-2009
DIMENSIONS IN INCHES
SURFACE ROUGHNESS: 125
REMOVE BURRS & BREAK EDGES 0.005 TO 0.015
.X ±.1
.XX ±.01
.XXX ±.005
ANGLES ±1°
THREADS
INTERNAL: CLASS 2B
EXTERNAL: CLASS 2A

APPROVALS		DATE
DRAWN	CMK	7/21/20
CHECKED	LS	7/21/20
APPROVED	CMK	7/21/20

© 2019 PARAVION TECHNOLOGY, INC. PARAVION IS A TRADEMARK OF PARAVION TECHNOLOGY, INC.

THIRD ANGLE PROJECTION

Paravion® Technology Inc.
2001 AIRWAY AVENUE
FORT COLLINS, CO 80524
www.paravion.com

DOCUMENT TITLE
C208RT INSTALLATION TOOLS

DRAWING NUMBER	CAGE CODE	REV	ECO
C208RT-7000	3CMA0	A	

DO NOT SCALE DRAWING
SHEET 4 OF 5

-12 FIXTURE PLATE

MATERIAL: 1/2" THICK ALUMINUM PLATE
FINISH: NONE

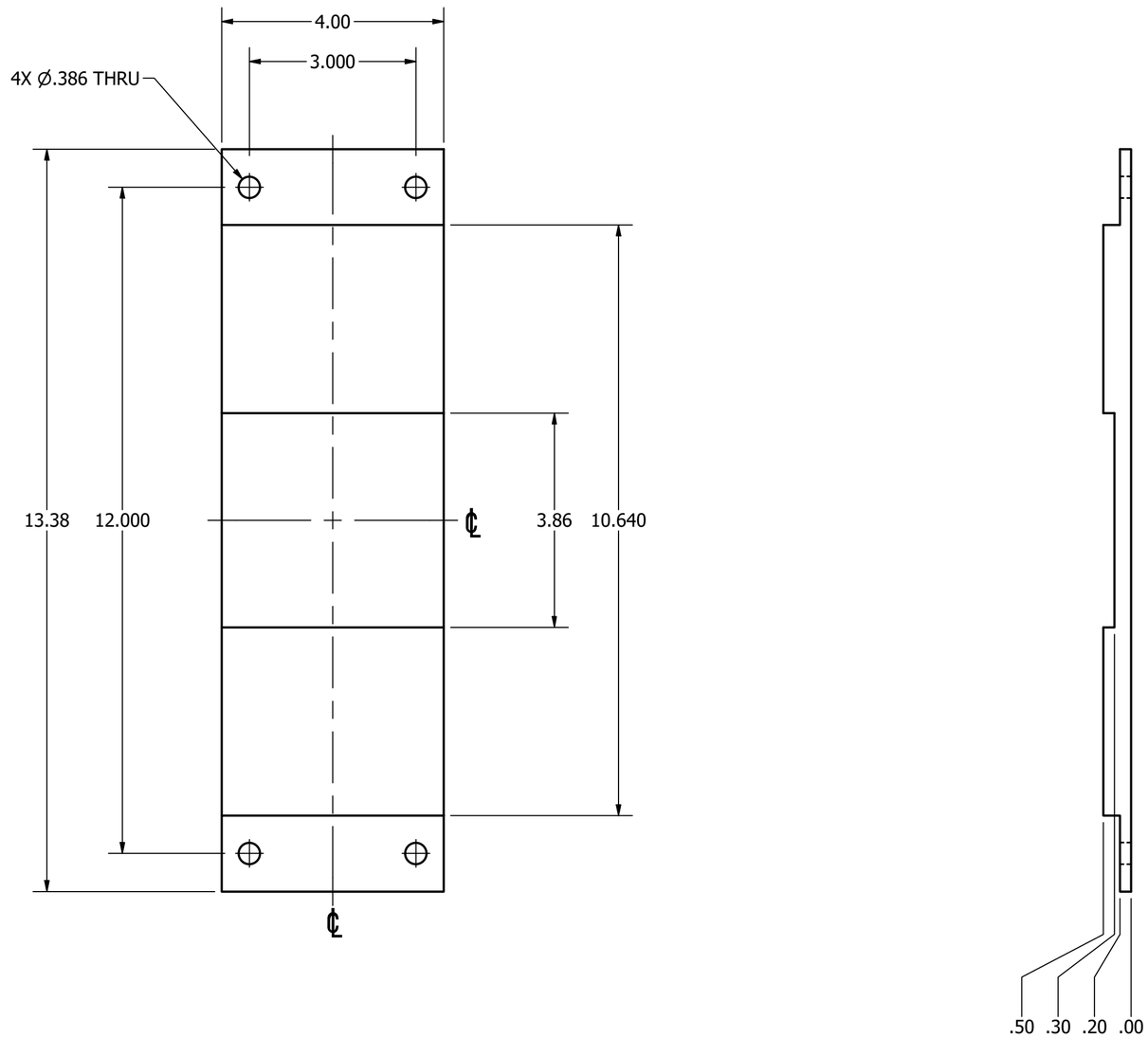

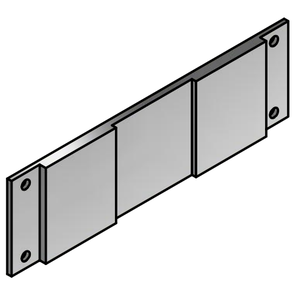

CONFIDENTIAL INFORMATION
THE INFORMATION AND DATA CONTAINED HEREIN IS PROPRIETARY AND IS SUBMITTED IN CONFIDENCE; AND SHALL NOT BE DISCLOSED, USED OR DUPLICATED FOR ANY PURPOSE WHATSOEVER WITHOUT THE PRIOR WRITTEN PERMISSION OF PARAVION TECHNOLOGY, INC.

UNLESS OTHERWISE SPECIFIED
DRAWING INTERPRETED PER ASME Y14.100-2004
DIMENSIONS INTERPRETED PER ASME Y14.5-2009
DIMENSIONS IN INCHES
SURFACE ROUGHNESS: 125
REMOVE BURRS & BREAK EDGES 0.005 TO 0.015
.X ±.1
.XX ±.01
.XXX ±.005
ANGLES ±1°
THREADS
INTERNAL: CLASS 2B
EXTERNAL: CLASS 2A

APPROVALS		DATE
DRAWN	CMK	7/21/20
CHECKED	LS	7/21/20
APPROVED	CMK	7/21/20

© 2019 PARAVION TECHNOLOGY, INC. PARAVION IS A TRADEMARK OF PARAVION TECHNOLOGY, INC.

THIRD ANGLE PROJECTION

Paravion® Technology Inc.
2001 AIRWAY AVENUE
FORT COLLINS, CO 80524
www.paravion.com

DOCUMENT TITLE
C208RT INSTALLATION TOOLS

DRAWING NUMBER	CAGE CODE	REV	ECO
C208RT-7000	3CMA0	A	

DO NOT SCALE DRAWING
SHEET 5 OF 5